SPB-8 <POWER BRICK>

Features
- Full Individual Regulated 8 Output DC Power Distributor for Guitar effectors
- '1A' High Current Switch Mode wallplug AC Adaptor Include
- 8 pcs DC Cable set Include (2-Short / 3-Mid / 3-Long)
- 2 Ch. DC 6V~12V, 100mA Adjustable Voltage Output
- 6 Ch. DC 9V, 100mA Individual Fixed Voltage Output
- Individual Output Status Indicator LEDs
- Short Protect / Hum Filter / Common Ground
- 3 Blue LEDs for Effector Board Lighting
- Low Input Power Indicator LED

SPB-8 Specifications
- Input Voltage Range : 14.5V ~ 18V (1A)
- Fixed Output Voltage : 9V (100mA each)
- Adjustable Output Voltage : 6V ~ 12V (100mA each)

AC adaptor Specification
- Input Voltage : 100~240V AC, 0.4A
- Output Voltage : 15V DC, 1A
- Power type : SMPS (Switch Mode Power Supply)

Dimension (package)
- L:140, W:125, H:75 (mm)

Warning
- Do not connect the plug from power supply into the output jacks. It may cause the damage of the unit.
- Do not use 'positive ground' effector (a rare thing) with normal effectors.
- To reduce the electric shock, do not exposure the equipment to rain or moisture.

ARTEC power brick

HANDCRAFTED SPB-8 ANALOG SYSTEM
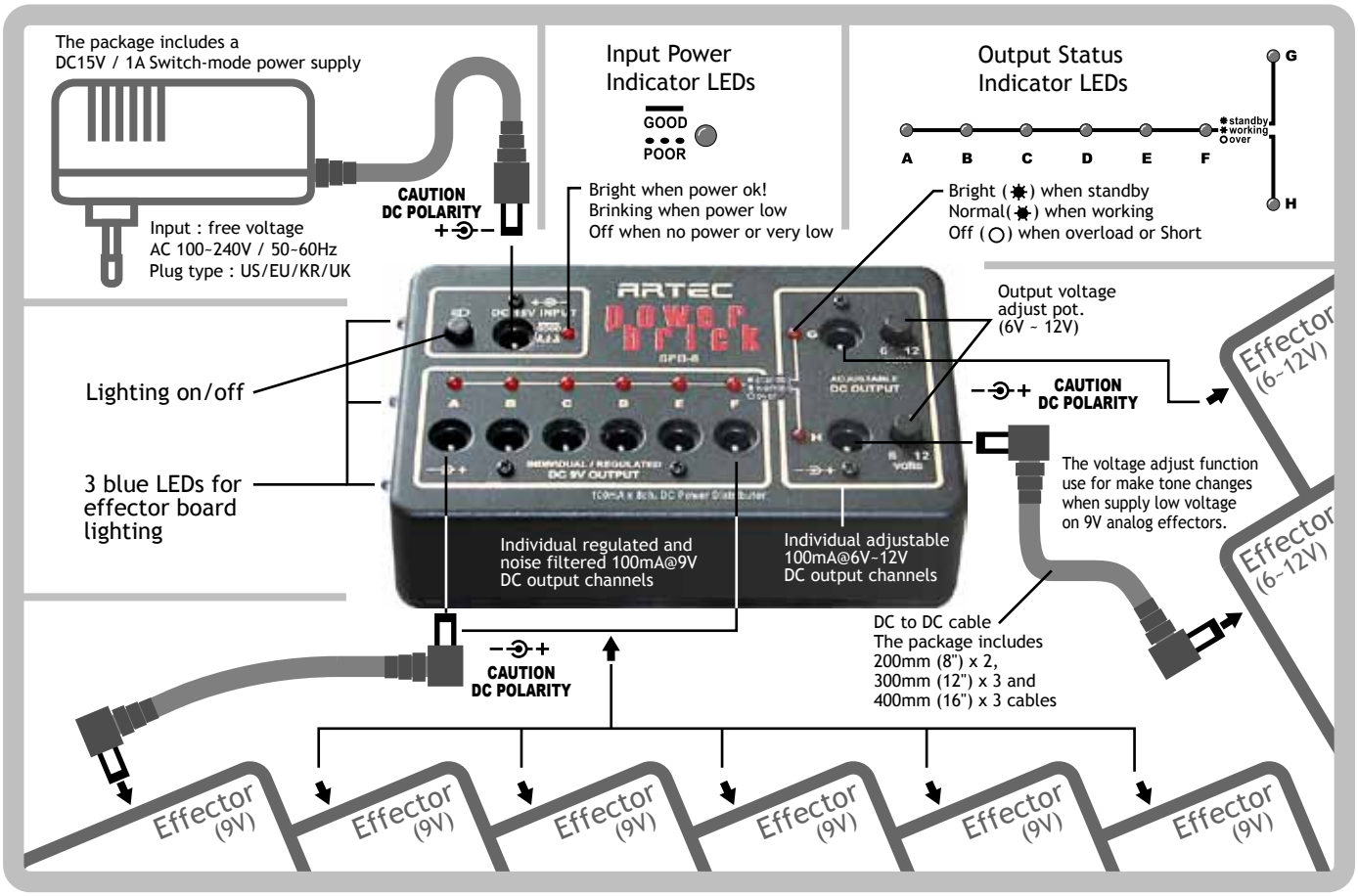
Quick Start Guide